JRG/JT™ Models for Pumping Liquids

Operating Specifications*

Model	SL	ML	HL	SG	HG
Motive Media	Liquid	Liquid	Liquid	Steam	Steam
Motive Pressure (PSIG)	15-250	15-250	15-250	30-150	20-150
Pressure Recovery %	10-15	30-35	40-50	15-20	30-35
Maximum Suction Lift	-27 Ft	-27 Ft	-27 Ft	-20 Ft	-20 Ft
Minimum Required NPSH	3 Ft	3 Ft	3 Ft	13 Ft	13 Ft

*Pumping water, 68°F

Typical Applications

Motive Fluid	
Liquid	Steam
Pump from Tank Pump from Sump Dilute in Line Transport Liquid	Pump from Tank Pump from Sump Heat Liquid Prime Pumps Evacuate Liquid Lines
SL, ML, HL	SG, HG, TLA

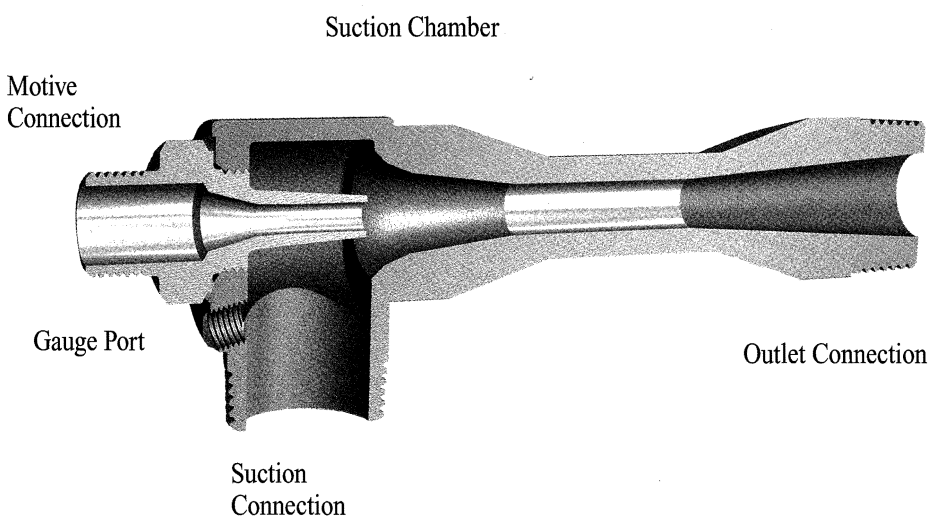

Principles of Operation for Pumping Liquids

Eductors operate on the basic principles of flow dynamics. This involves taking a high pressure motive stream and accelerating it through a tapered nozzle to increase the velocity of the fluid (gas or liquid) that is put through the nozzle. This fluid is then carried on through a secondary chamber where the friction between the molecules of it and a secondary fluid (generally referred to as the suction fluid) causes this fluid to be pumped. These fluids are intimately mixed together and discharged from the eductor.

There are three connections common to all eductors.

MOTIVE Connection

This connection is where the power for the eductor is generated, by increasing the velocity of the motive fluid. The JRG/JT nozzle in this section takes advantage of the physical properties of the motive fluid. Eductors with liquid motives use a converging nozzle as liquids are not generally compressible. Eductors with gas motives utilize converging-diverging nozzles to achieve maximum benefit from the compressibility of the gas. All JRG/JT nozzles for eductors have smooth flow paths. Flow paths with sudden steps or roughness on these high velocity surfaces cause eductors to operate less efficiently.

SUCTION Connection

This connection of the eductor is where the pumping action of the eductor takes place. The motive fluid passes through the suction chamber, entraining the suction fluid as it passes. The friction between the fluids causes the chamber to be evacuated. This allows pressure in the suction vessel to push additional fluid into the suction connection of the eductor. The high velocity of the motive stream in this section of the eductor directs the combined fluids toward the outlet section of the eductor.

OUTLET Connection

As the motive fluid entrains the suction fluid, part of the kinetic energy of the motive fluid is imparted to the suction fluid. This allows the resulting mixture to discharge at an intermediate pressure. The percentage of the motive pressure that can be recovered is dependent upon the ratio of motive flow to suction flow and the amount of suction pressure pulled on the suction port. The mixture then passes through the diverging taper that converts the kinetic energy back to pressure. The combined fluid then leaves the outlet.

www.jrgjt.com

Because of The Clark-Reliance Corporation's continuing program of research and development, all specifications and descriptions are subject to change without notice. This data is intended for the exclusive use of our customers, including engineers and designers. Reproduction in whole or in part by others is prohibited.

How to Size Liquid Motive Eductors for Pumping Liquids

Using Liquid Motives to Pump Liquid Suction Fluids

To determine the correct eductor for a specific application, follow the steps in this section, using the performance tables (pages 3-4) provided to achieve your desired results. (NOTE: All JRG/JT tables use the 1-1/2 inch unit as the standard, and eductors are sized using a Sizing Factor (S.F.) based on this standard unit.)

Step 1 Find the suction lift* or head (Hs) that is equal to or greater than your desired lift. If your lift is between two of the lifts on the table, use an average of the two. You can also or use the calculated result from the **NPSH** formula found on page 5 of this manual. Using the **NPSH** number will correct for temperature variations and friction losses, resulting in a more accurate value.

Step 2 Find the outlet head** (Ho) equal to or greater than your actual outlet head. It is important to include friction losses into the desired outlet head. (Be certain that friction losses in the outlet line are calculated using the combined rate of both the motive and the suction flows.) It is important that the outlet line from the eductor be as large or larger than the outlet connection.

Step 3 Find the motive pressure (Pm):• Locate the motive pressure from the table that is closest to or *lower* than your actual motive pressure. The flow specified represents the Tabulated Suction Flow for each of the different models of eductors. To determine the size of eductor needed, first use the following formula to determine the Desired Sizing Factor (S.F.) Do this for each of the models.

$$\textbf{Desired S.F.} = \frac{\textbf{Desired Suction Flow}}{\textbf{Tabulated Suction Flow}}$$

If a standard unit is being used, pick the size unit that has a Tabulated S.F. (page 7) equal to or greater than the Desired S.F.

If an exact match is desired, consult your Jerguson/Jacoby-Tarbox representative or the factory.

Step 4 Calculate the amount of motive flow used by multiplying the Q_m and Q_s found in the tables by the Tabulated S.F. obtained in Step 3. Do this for each of the models of eductors.

Step 5 Select the unit from Steps 1-4 that best meets the motive and suction parameters of the specific application. If a turndown ratio*** of greater than 35% is needed, then choose two or more eductors that have the correct turndown ratio and operate these units in parallel.

In some cases, the unit chosen will have the greatest suction flow while consuming as little motive fluid as possible. This is generally true for pumping applications. In other applications, such as the dilution of chemicals, the motive flow should be as high as possible: while the suction flow will be low. In this case, the motive flow should be matched to the desired motive flow and the suction port should be throttled to achieve the desired dilution rate. As a general rule in dilution applications, the HL is the best unit to choose.

In all cases, the correct unit is the one that matches your desired range of motive-to-suction flows the closest.

Correcting for Non-Water Fluid Specifications

The performance specifications for JRG/JT eductors are based on using water• with a specific gravity of 1.0 and a viscosity of 1 Centipoise. Fluids with differing viscosities or specific gravities need to be corrected to water, to obtain accurate performance estimates.

Viscosity is the measure of the internal resistance of a fluid to flow. This should be taken into consideration in most pressure drop and flow calculations within a given system. When used with JRG/JT eductors, fluids with viscosities of less than 100 Cp. have a negligible effect. Viscosities of up to 500 Cp. can be used with only small corrections. For higher viscosities (applications above 500 Cp.), we suggest that you work with your trained representative or the applications personnel at the factory. Eductors can be used with viscosities over 500 Cp. with calculated adjustments. The effects of viscosity on the pressure drops in the line leading to the eductor must be calculated separately.

Specific gravity is the measure of the weight per volume of a liquid. The performance data for eductors is based on water having a specific gravity of 1.0; other specific gravities will require that adjustments be made to the performance table value of the eductors. See the topics that follow for specifics on how to make these adjustments.

Motive Flow Adjustments

The motive flow is the amount of liquid used to power the eductor. To adjust the value from the performance table for specific gravity (Sg) of the motive fluid: Multiply the motive flow in the performance chart by the square root of(1/Sg).

Example :

50 GPM Tabulated Flow adjusted for a Specific Gravity of 1.3: 50 $\sqrt{}$(1/1.3) = 43.85 GPM Actual motive flow

Suction Flow Adjustments

The best way to adjust for the specific gravity or temperature effects of the suction fluid is to do the calculation for NPSH (see page 5 of this manual). If you desire a rough estimate of the specific gravity effect, multiply the suction lift by the specific gravity of the liquid. If the liquid temperature exceeds 100°F, you must use the NPSH calculation, or consult your representative or the factory.

Outlet Adjustments

The outlet pressure of the eductor must be adjusted for the specific gravity of the outlet liquid, particularly if the eductor is discharging to an elevated surface. If the outlet is being measured or controlled by a pressure regulator or valve, no adjustment is required. To calculate the actual outlet pressure, multiply the feet of elevation by the specific gravity of the outlet liquid.

*Suction Lift = vertical distance, Ft, from the suction connection to the surface of the suction liquid source. Minus = below the suction connection.
**Outlet Head = vertical distance, Ft, from the outlet connection to the surface or the outlet liquid destination. Positive = above the outlet connection. Use zero for equal to or below outlet connection.
***Turndown Ratio = (Max. suction flow minus min. suction flow) divided by max. suction flow desired.
• Table data is based on water-like liquids at a temperature of 68°F.

www.jrgjt.com

HL, ML, SL **Liquids Pumping Liquids** **1-1/2″ Unit**

Suction Flow, Qs (GPM)

Suct Hs(Ft)	Outlet Ho(Ft)	Motive Pressure, Pm (PSIG) 20 HL	20 ML	20 SL	30 HL	30 ML	30 SL	40 HL	40 ML	40 SL	50 HL	50 ML	50 SL	60 HL	60 ML	60 SL	80 HL	80 ML	80 SL	100 HL	100 ML	100 SL	120 HL	120 ML	120 SL	160 HL	160 ML	160 SL	200 HL	200 ML	200 SL	250 HL	250 ML	250 SL
	0	40	46	47	40	46	50	40	46	51	40	46	51	40	46	51	40	46	51	40	46	51	40	46	51	40	46	51	40	46	51	40	46	51
	5	36	39	38	40	46	44	40	46	49	40	46	51	40	46	51	40	46	51	40	46	51	40	46	51	40	46	51	40	46	51	40	46	51
	10	29	30	27	37	38	35	40	46	41	40	46	47	40	46	51	40	46	51	40	46	51	40	46	51	40	46	51	40	46	51	40	46	51
	15	21	20	13	31	31	25	39	39	33	40	46	39	40	46	45	40	46	51	40	46	51	40	46	51	40	46	51	40	46	51	40	46	51
	20	14	8		25	23	13	34	32	23	40	40	31	40	46	38	40	46	48	40	46	51	40	46	51	40	46	51	40	46	51	40	46	51
	25				19	13		29	25	13	37	34	23	40	41	30	40	46	43	40	46	51	40	46	51	40	46	51	40	46	51	40	46	51
	30				13			24	13		23	12	39	39	34	20	40	46	36	40	46	46	40	46	51	40	46	51	40	46	51	40	46	51
+10	40							13			23	10		31	22	5	40	37	22	40	46	36	40	46	51	40	46	51	40	46	51	40	46	51
(4.3	50										13			22	9		36	26	9	40	41	24	40	46	40	40	46	51	40	46	51	40	46	51
PSIG)	60										3			13			29	16		40	32	12	40	46	28	40	46	51	40	46	51	40	46	51
	70													4			22	6		37	23	1	40	37	16	40	46	37	40	46	51	40	46	51
	80																19			33	13		40	28	3	40	46	27	40	46	46	40	46	51
	100																4			20			34	11		40	39	8	40	46	14	40	46	47
	120																			7			22			40	24		40	46	14	40	46	29
	140																						10			35	8		40	34		40	46	13
	160																									26			40	19		40	35	
	180																									15			35			40	20	
	200																															40		
	220																															34		
	0	36	40	39	36	43	45	36	43	48	36	43	48	36	43	48	36	43	48	36	43	48	36	43	48	36	43	48	36	43	48	36	43	48
	5	32	32	29	36	40	36	36	43	42	36	43	48	36	43	48	36	43	48	36	43	48	36	43	48	36	43	48	36	43	48	36	43	48
	10	24	22	16	33	33	27	36	41	34	36	43	41	36	43	46	36	43	48	36	43	48	36	43	48	36	43	48	36	43	48	36	43	48
	15	16	12		27	25	16	36	34	25	36	41	33	36	43	40	36	43	48	36	43	48	36	43	48	36	43	48	36	43	48	36	43	48
	20	9			21	16	3	31	27	16	36	35	25	36	43	32	36	43	44	36	43	48	36	43	48	36	434	48	36	43	48	36	43	48
	25				15	6		25	19	4	34	29	16	36	37	24	36	43	37	36	43	48	36	43	48	36	43	48	36	43	48	36	43	48
	30				9			20	9		29	19	5	36	29	15	36	43	31	36	43	44	36	43	48	36	43	48	36	43	48	36	43	48
+5	40							10			20	7		28	17		36	33	17	36	43	32	36	43	48	36	43	48	36	43	48	36	43	48
(2.2	50										10			20	5		34	23	4	36	38	20	36	43	36	36	43	48	36	43	48	36	43	48
PSIG)	60													11			26	13		36	29	8	36	43	26	36	43	48	36	43	48	36	43	48
	70																19	3		32	19		36	34	11	36	43	44	36	43	48	36	43	48
	80																16			29	10		36	26		36	43	34	36	43	48	36	43	48
	100																2			18			32	9		36	43	14	36	43	36	36	43	48
	120																			5			21			36	21	4	36	43	27	36	43	48
	140																						9			34	6		36	31	11	36	43	36
	160																									24			36	17		36	42	19
	180																									14			36			36	30	10
	200																															36	17	
	220																															36		
	0	33	34	30	33	41	38	33	41	44	33	41	45	33	41	45	33	41	45	33	41	45	33	41	45	33	41	45	33	41	45	33	41	45
	5	26	25	19	33	34	28	33	41	36	33	41	42	33	41	45	33	41	45	33	41	45	33	41	45	33	41	45	33	41	45	33	41	45
	10	19	15	5	29	27	18	33	36	27	33	40	34	33	41	41	33	41	45	33	41	45	33	41	45	33	41	45	33	41	45	33	41	45
	15	12	4		23	18	6	32	28	18	33	37	26	33	41	33	33	41	45	33	41	45	33	41	45	33	41	45	33	41	45	33	41	45
	20	4			18	9		27	21	7	33	31	17	33	38	26	33	41	39	33	41	45	33	41	45	33	41	45	33	41	45	33	41	45
	25				12			22	14		31	24	8	33	32	18	33	41	32	33	41	43	33	41	45	33	41	45	33	41	45	33	41	45
	30				6			17	4		26	15		34	25	9	33	41	25	33	41	39	33	41	45	33	41	45	33	41	45	33	41	45
0	40							7			17	3		25	13		33	30	3	33	41	27	33	41	29	33	41	45	33	41	45	33	41	45
(0	50										7			17			32	20		33	35	15	33	41	22	33	41	45	33	41	45	33	41	45
PSIG)	60													8			25	10		33	26	3	33	32	18	33	41	39	33	41	45	33	41	45
	70																19			31	16		33	23	6	33	41	29	33	41	40	33	41	45
	80																15			28	7		33	15		33	41	20	33	41	40	33	41	45
	100																1			17			30			33	19		33	41	23	33	41	27
	120																			4			19			33	3		33	30	0	33	41	17
	140																						9			33			33	15		33	32	8
	160																									23			33			33	22	
	180																									13			33			33	13	
	200																															33		
	220																															33		
	0	28	27	21	30	36	30	31	38	37	31	38	42	31	38	42	31	38	42	31	38	42	31	38	42	31	38	42	31	38	42	31	38	42
	5	21	18	6	31	29	19	31	37	29	31	38	36	31	38	41	31	38	42	31	38	42	31	38	42	31	38	42	31	38	42	31	38	42
	10	14	7		25	21	7	31	31	19	31	38	27	31	38	34	31	38	42	31	38	42	31	38	42	31	38	42	31	38	42	31	38	42
	15	8			20	12		29	24	8	31	33	19	31	38	27	31	38	40	31	38	42	31	38	42	31	38	42	31	38	42	31	38	42
	20				14	3		24	16		31	26	09	31	34	19	31	38	33	31	38	42	31	38	42	31	38	42	31	38	42	31	38	42
	25				8			19	8		28	19		31	28	9	31	38	26	31	38	38	31	38	42	31	38	42	31	38	42	31	38	42
	30				2			14			23	11		31	22	3	31	38	20	31	38	44	31	38	42	31	38	42	31	38	42	31	38	42
-5	40							4			14			23	9		31	27	7	31	38	27	31	38	42	31	38	42	31	38	42	31	38	42
(-2.2	50										5			15			29	17		31	38	22	31	38	35	31	38	42	31	38	42	31	38	42
PSIG)	60													6			22	7		31	33	10	31	38	42	31	38	42	31	38	42	31	38	42
	70																15	7		31	23		31	38	13	31	38	35	31	38	42	31	38	42
	80																11			28	14		31	30	2	31	38	25	31	38	42	31	38	42
	100																			25	4		31	21		31	38	16	31	38	36	31	38	35
	120																			22			29	12		31	38	6	31	38	27	31	38	17
	140																			16			18	2		31	32		31	38	18	31	38	3
	160																			3			7			31	17		31	38	1	31	33	
	180																									31	1		31	28		31	27	
	200																									21			31	14		31	14	
	220																															31		
		20 Motive (PSIG)			30			40			50			60			80			100			120			160			200			250		
Motive		26.7		9.7		17.2		37.2		13.4		24.0		47.7		17.3		29.3		60.1		21.7		37.7		73.5		26.6		47.6		94.7		34.2
Flow, Qm (GPM)			15		30.6		11.1		20.9		42.8		15.5		26.8		52.2		18.9		33.8		67.2		24.3		41.3		84.8		30.6		53.2	

www.jrgjt.com

HL, ML, SL | **Liquids Pumping Liquids** | **1-1/2" Unit**

Suction Flow, Qs (GPM)

Suct Hs(Ft)	Outlet Ho(Ft)	Motive Pressure, Pm (PSIG) 20 HL	20 ML	20 SL	30 HL	30 ML	30 SL	40 HL	40 ML	40 SL	50 HL	50 ML	50 SL	60 HL	60 ML	60 SL	80 HL	80 ML	80 SL	100 HL	100 ML	100 SL	120 HL	120 ML	120 SL	160 HL	160 ML	160 SL	200 HL	200 ML	200 SL	250 HL	250 ML	250 SL
	0	24	20	9	29	31	22	29	34	30	29	34	36	29	34	40	29	34	40	29	34	40	29	34	40	29	34	40	29	34	40	29	34	40
	5	17	11		27	23	11	29	32	21	29	34	29	29	34	40	29	34	40	29	34	40	29	34	40	29	34	40	29	34	40	29	34	40
	10	11			22	15		29	26	11	29	34	21	29	34	29	29	34	40	29	34	40	29	34	40	29	34	40	29	34	40	29	34	40
	15				16	6		26	18		29	28	12	29	34	21	29	34	40	29	34	40	29	34	40	29	34	40	29	34	40	29	34	40
	20				11			21	11		29	21	2	29	30	12	29	23	28	29	34	40	29	34	40	29	34	40	29	34	40	29	34	40
	25							16	3		25	14		29	24	3	29	34	21	29	34	34	29	34	40	29	34	40	29	34	40	29	34	40
	30							11			20	7		28	18		29	34	15	29	34	30	29	34	40	29	34	40	29	34	40	29	34	40
-10	40										12			21	6		29	23		29	34	18	29	34	29	29	34	40	29	34	40	29	34	40
(-4.3	50										1			12			29	13		29	30	6	29	34	19	29	34	40	29	34	40	29	34	40
PSIG)	60													3			27	3		29	20		29	34	8	29	34	31	29	34	40	29	34	40
	70																16			29	11		29	28	4	29	34	22	29	34	40	29	34	40
	80																13			29	1		29	19		29	34	12	29	34	32	29	34	40
	100																			15			29	1		29	30		29	34	15	29	34	25
	120																			3			17			29	15		29	34		29	34	16
	140																						6			29			29	28		29	34	1
	160																									21			29	12		29	29	
	180																									12			29			29	25	
	200																															29	12	
	220																															29		
	0	19	14		24	25	12	24	31	23	24	31	30	24	31	36	24	31	36	24	31	36	24	31	36	24	31	36	24	31	36	24	31	36
	5	13	4		24	17		24	27	13	24	31	22	24	31	30	24	31	36	24	31	36	24	31	36	24	31	36	24	31	36	24	31	36
	10	7			18	9		24	20	2	24	29	13	24	31	22	24	31	36	24	31	36	24	31	36	24	31	36	24	31	36	24	31	36
	15				13			23	13		24	23	3	24	31	14	24	31	29	24	31	36	24	31	36	24	31	36	24	31	36	24	31	36
	20				8			18	5		24	16		24	26	4	24	31	22	24	31	35	24	31	36	24	31	36	24	31	36	24	31	36
	25							13			22	9		24	19		24	31	15	24	31	29	24	36	36	24	31	36	24	31	36	24	31	36
	30							8			18	3		24	14		24	31	11	24	31	25	24	31	32	24	31	36	24	31	36	24	31	36
-15	40										9			18	2		24	20		24	31	13	24	31	24	24	31	36	24	31	36	24	31	36
(-6.5	50													10			24	10		24	27	2	24	31	15	24	31	31	24	31	36	24	31	36
PSIG)	60																18			24	17		24	31	4	24	31	26	24	31	36	24	31	36
	70																15			24	8		24	24		24	31	17	24	31	36	24	31	36
	80																10			24			24	16		24	31	8	24	31	28	24	31	36
	100																			15			24			24	27		24	31	11	24	31	24
	120																			2			16			24	12		24	31		24	31	12
	140																						5			24			24	24		24	31	1
	160																									21			24	10		24	25	
	180																									12			24			24	16	
	200																												10			24	10	
	220																															24		
	0	16	7		21	20	3	21	28	15	21	28	24	21	28	31	21	28	31	21	28	31	21	28	31	21	28	31	21	28	31	21	28	31
	5	10			20	12		21	22	5	21	28	15	21	28	24	21	28	31	21	28	31	21	28	31	21	28	31	21	28	31	21	28	31
	10	3			15	3		21	15		21	25	6	21	28	16	21	28	30	21	28	31	21	28	31	21	28	31	21	28	31	21	28	31
	15				10			20	8		21	18		21	27	7	21	28	24	21	28	31	21	28	31	21	28	31	21	28	31	21	28	31
	20				5			15			21	12		21	21		21	28	17	21	28	30	21	28	31	21	28	31	21	28	31	21	28	31
	25							10			20	5		21	15		21	28	9	21	28	24	21	28	31	21	28	31	21	28	31	21	28	31
	30							6			15	1		21	10		21	28	6	21	28	20	21	28	31	21	28	31	21	28	31	21	28	31
-20	40										7			16			21	15		21	28	9	21	28	20	21	28	31	21	28	31	21	28	31
(-8.9	50													8			21	8		21	28		21	28	10	21	28	31	21	28	31	21	28	31
PSIG)	60																16			21	15		21	28		21	28	21	21	28	31	21	28	31
	70																10			21	6		21	22		21	28	13	21	28	31	21	28	31
	80																8			21			21	13		21	28	4	21	28	25	21	28	31
	100																			14			21			21	28		21	28	8	21	28	31
	120																			1			16			21	9		21	28		21	28	20
	140																						5			21			21	21		21	28	9
	160																									21			21	7		21	28	
	180																									12			21			21	19	
	200																												4			21	6	
	220																															21		
	0	12			17	14		17	24	7	17	24	17	17	24	24	17	24	25	17	24	25	17	24	25	17	24	25	17	24	25	17	24	25
	5	6			17	6		17	18		17	24	08	17	24	18	17	24	25	17	24	25	17	24	25	17	24	25	17	24	25	17	24	25
	10				17			17	10		17	20		17	24	9	17	24	25	17	24	25	17	24	25	17	24	25	17	24	25	17	24	25
	15				7			17	3		17	14		17	23		17	24	18	17	24	25	17	24	25	17	24	25	17	24	25	17	24	25
	20							13			17	7		17	17		17	24	18	17	24	25	17	24	25	17	24	25	17	24	25	17	24	25
	25							8			17			17	11		17	24	2	17	24	19	17	24	25	17	24	25	17	24	25	17	24	25
	30							2			17			17	7		17	24		17	24	16	17	24	25	17	24	25	17	24	25	17	24	25
-25	40										4			13			17	15		17	24	5	17	24	16	17	24	25	17	24	25	17	24	25
(-10.9	50													5			17	6		17	24		17	24	7	17	24	25	17	24	25	17	24	25
PSIG)	60																14			17	13		17	24		17	24	17	17	24	25	17	24	25
	70																9			17	3		17	18		17	24	9	17	24	25	17	24	25
	80															6				17			17	10		17	24	1	17	24	20	17	24	25
	100																			14			17			17	24		17	24	4	17	24	14
	120																			1			17			17	7		17	24		17	24	5
	140																						16			17			17	18		17	24	
	160																						5			12			17	4		17	20	
	180																									2			17			17	16	
	200																												17			17	4	
	220																															17		

	20 Motive (PSIG)	30	40	50	60	80	100	120	160	200	250
Motive	31.0 11.2	19.3	40.4 14.6	25.6	50.2 18.2	30.6	62.1 22.5	38.7	75.2 27.2	48.4	96.0 34.7
Flow, Qm (GPM)	17.4	34.4 12.4	22.7	45.6 16.5	28.2	54.5 19.7	34.9	69.0 24.9	42.2	86.2 31.2	53.9

www.jrgjt.com

How to Determine Net Positive Suction Head

Net Positive Suction Head (NPSH) is one of the most used terms for pumps (including eductors) and also one of the least understood. Simply stated, NPSH is a method of evaluating a set of suction conditions for a pump. This formula takes into account variables for the particular liquid being pumped and the conditions under which it is being pumped. It corrects them to a set of standard conditions. This allows the user to reliably predict the performance of a given pump when liquids with varying temperatures, specific gravities, and vapor pressures are being pumped. This formula also corrects for friction loss in the pump suction.

When being used with eductors, it is important that the NPSH be calculated for both the motive and the suction fluids. This is because the motive fluid is also exposed to the reduced pressure in the suction chamber of the eductor. Failure to consider this could result in the motive or suction fluid flashing to a gas as it enters the suction chamber. This would cause the eductor to pump reduced or no suction fluid, or possibly cause the motive fluid to flow out the suction port. When determining the NPSH of both, the one with the higher vapor pressure will be the limiting liquid.

NPSH should always be calculated at the centerline of the eductor. This calculation will result in an adjusted pressure in feet of liquid (water). It must be equal to or greater than the NPSH on the table (see page 1) to achieve the performance at these conditions.

NOTE: Many eductor manufacturers specify performance in feet of water lift at 60 to 70°F. As a rule, this can be changed to NPSH by subtracting the lift from 33 Ft, or in the case of a positive suction head by adding it to 33 Ft.

Calculate the NPSH of the suction fluid by using the following formula:

$$NPSH = 2.31 \times (Ps - Pvp)/Sg + Hs - Hf$$

Hf = Friction loss in the suction piping at full flow conditions. Specified in feet of liquid. This frequently can be found in a handbook on flow through pipes if the piping arrangement is known. The JRG/JT sizing program will estimate friction loss if needed.

Hs = Vertical feet that the liquid is being moved above or below the centerline of the eductor. This number will be negative if the fluid is below, or positive if it is above, the eductor.

Ps = Pressure in the suction vessel in PSIA (Pounds per Square Inch Absolute). If the vessel is at atmospheric pressure, specify normal atmospheric pressure at the application site. (Normal pressure at sea level is 14.7 PSIA.)

Pvp = Vapor pressure of the liquid being pumped at the highest temperature that it will be pumped.

To calculate for the NPSH of the motive fluid, change the Pvp to the vapor pressure of the motive fluid and recalculate using all other parameters of the suction conditions.

To determine vapor pressure for water, go to a set of steam tables. If the liquid is a water-based slurry or solution, these tables will generally provide a conservative estimate. For other chemicals the vapor pressure can generally be obtained from the supplier or a chemical handbook. Estimates can be used if it is understood that these may cause some problems if the estimated value is lower than the actual vapor pressure of the liquid.

Sg = Specific gravity of the liquid being pumped.

www.jrgjt.com

How to Size Liquid Motive Eductors for Pumping Liquids

Motive Liquid
Quantity of Flow Available
Pressure Available (in flowing condition)
Specific Gravity
Viscosity
Temperature
Vapor Pressure at Operating Temperature

Suction Liquid
Required Pumped Flow
Lift or Head of Liquid
Specific Gravity
Viscosity
Temperature
Vapor Pressure at Operating Temperature

Outlet Liquid
Pressure, Lift or Head
If pressure is in outlet head, Specific Gravity of the outlet fluid will be required.

Example:

Pumping water at 150°F with a suction lift of 14 Ft from the liquid surface to the center of the eductor.

Hf	Friction loss	2 Ft
Hs	Liquid Lift	-14 Ft
Ps	Suction Pressure or Atmospheric Pressure	14.6 PSIA
Pvp	Liquid Vapor Pressure	3.73 PSIA
Sg	Specific Gravity	0.978

Calculation using formula above:

2.31 x (14.6 - 3.73)/0.978 + (-14) - 2 = 9.7 NPSH

The suction Hs above (14.6 PSIA x 2.31)/0.978 will push up 34.5 feet of water in a column. Therefore, the corrected suction lift is 9.7 - 34.5 = -24.8 Ft.

To find the correct eductor for this application, use -25 Ft of suction lift. Then size from the tables.

www.jrgjt.com

How to Size Steam Motive Eductors for Pumping Liquids

Using Steam Motives to Pump Liquid Suction Fluids

To determine the correct eductor for a specific application, follow the steps in this section, using the performance tables (pages 3-4) provided to achieve your desired results. (NOTE: All JRG/JT tables use the 1-1/2 inch unit as the standard, and eductors are sized using a Sizing Factor (S.F.) based on this standard unit.)

1. If the suction fluid is not water, adjust the suction and outlet head Hs and Ho by multiplying by the specific gravity of the fluid.
2. Find the suction lift (Hs) that is nearest to or exceeds your desired suction lift in the table on page 8.
3. Use the motive pressure (Pm) closest to or less than your actual motive pressure.
4. Locate the outlet head (Ho) that is nearest to or exceeds your desired outlet head in the table on page 8.
5. Use the temperature column that is nearest to or exceeds the temperature of the suction fluid.
6. The table will give the suction flow for JRG/JT models SG, HG. Divide the Desired Suction Flow (Qs) by the Tabulated Suction Flow for each of the models found in the performance table. This will give the Desired Sizing Factor (S.F.) for each unit.
7. Pick a unit with a Tabulated S.F. that meets or exceeds the one found in Step 6. (Use table below.)
8. Determine the motive flow required for each unit by multiplying the Tabulated S.F. for each model by the Tabluated motive flow (Qm). Repeat to find actual Suction Flows.
9. Pick the unit that most closely matches the desired flows for the motive and suction.

Example:

Desired Suction Flow Rate (Qs)	17 GPM
Suction Lift in Feet (Hs)	15 Ft
Outlet Pressure (Ho) in feet of water	20 Ft
Motive Steam Pressure (Pm)	100 PSIG
Motive Flow Available(Qm)	500 Lb/Hr
Suction Temperature (Ts)	100°F

After working through the first 4 steps of the sizing directions, we find the tabulated suction flows for the two models in 1-1/2″ size are:

SG.....30 GPM
HG.....21 GPM

The Desired Sizing Factors are as follows:
SG: 17 GPM Desired/30 GPM tabulated = 0.57 Desired S.F.

HG: 17 GPM Desired/21 GPM tabulated = 0.81 Desired S.F.

For the model SG this will require a unit with a Desired Sizing Factor of approximately 0.57. A 1-1/4″ unit has a Tabulated S.F. of 0.61. This unit will have an actual suction flow (Qs) of [30 GPM x 0.61 Tabulated S.F.] or 18.3 GPM. The motive flow (Qm) will be [333 Lb/Hr x 0.61 Tabulated S.F.] or 203 Lb/Hr.

For the model HG this will require a unit with a Desired S.F. of approximately 0.81. A 1-1/2″ unit has a Tabulated S.F. of 1.00. This unit will have an actual suction flow (Qs) of [21 GPM x 1.00 Tabulated S.F.] or 21 GPM. The actual Motive Flow (Qm) will be [750 Lb/Hr x 1.00 Tabulated S.F.] or 750 Lb/Hr.

For this application we can see that the model SG 1-1/4″ has performance that is the closest to the desired performance for the application. The HG unit uses more steam than is available.

SL, ML, HL, SG, HG — Sizing Factors (S.F.)

Unit Size	1/2″	3/4″	1″	1-1/4″	1-1/2″	2″	2-1/2″	3″	4″	6″	8″	10″	12″
S.F.	0.12	0.21	0.34	0.61	1.00	1.82	3.17	5.92	11.8	24.0	49.0	71.0	123.0

www.jrgjt.com

SG, HG — Steam Pumping Liquids — 1-1/2″ Unit

Suct Hs(Ft)	Outlet Ho(Ft)	MOTIVE STEAM PRESSURE, Pm (PSIG)																											
		35			60						80						100						120						150		
		HG			SG			HG			SG			HG			SG			HG			SG			HG			SG			HG		
		SUCTION WATER TEMPERATURE, Ts (°F)																													
		80	120	150	80	120	150	80	120	150	80	120	150	80	120	150	80	120	150	80	120	150	80	120	150	80	120	150	80	120	150
	0	59	55	31	57	57	48	64	51	36	57	59	43	62	49	35	62	59	42	57	46	34	63	56	42	56	46	34	65	54	42	54	44	34
	5	55	55	31	48	57	48	64	51	36	57	59	43	62	49	35	62	59	42	57	46	34	63	56	42	56	46		65	54	42	54	44	
	10	40	55	31	37	43	48	64	51	36	51	59	43	62	49	35	62	49	42	57	46	34	63	56	42	56	46		65	54	42	54	44	
	15	23	55	31	24	30	33	64	51	36	43	49	43	62	49	35	57	59	42	57	46	34	63	56	42	56	46		65	54	42	54	44	
	20			31	13	16		64	51	36	34	37	43	62	49	35	49	59	42	57	46	34	63	56	42	56	46		65	54	42	54	44	
	25							58	51	36	26	24	29	62	49	35	41	48	42	57	46	34	55	56	42	56	46		65	54	42	54	44	
5	30							48	51	36	17	12		62	49	35	30	38	42	57	46	34	47	54	42	56	46		65	54	42	54	44	
(2.2	40							28	26	36				52	49	35	17	15		57	46	34	33	28	36	56	46		53	54	42	54	44	
PSIG)	50													42	49	35				57	46	34				56	46		39	54	42	54	44	
	60																			57	46	34				56	46		24			54	44	
	70																			41	41	34				56	46					54	44	
	80																									56	46					54	44	
	100																															54	44	
	0	53	43	23	48	49	31	52	38	24	55	48	30	52	38	24	56	45	30	49	37	24	58	43	30	45	35	24	58	43	31	40	31	
	5	53	43	23	37	43	31	52	38	24	55	48	30	52	38	24	56	45	30	49	37	24	58	43	30	45	35		58	43	31	40	31	
	10	40	43	23	27	30	31	52	38	24	44	48	30	52	38	24	56	45	30	49	37	24	58	43	30	45	35		58	43	31	40	31	
	15	23	43	23	16	16		52	38	24	34	38	30	52	38	24	49	45	30	49	37	24	58	43	30	45	35		58	43	31	40	31	
	20							52	38	24	23	24	27	52	38	24	41	45	30	49	37	24	53	43	30	45	35		58	43	31	40	31	
	25							52	38	24				52	38	24	35	36	30	49	37	24	45	43	30	45	35		58	43	31	49	31	
-5	30							48	38	24				52	38	24	21	26	24	49	37	24	38	43	30	45	35		58	43	31	40	31	
(-2.2	40							28	26	24				52	38	24				49	37	24	21	28	19	45	35		45	43	31	40	31	
PSIG)	50													42	38	24				49	37	24				45	35		30	28	31	40	31	
	60																			49	37	24				45	35					40	31	
	70																			41	37	24				45	35					40	31	
	80																									45						40	31	
	100																															40	31	
	0	49	36	16	43	40	23	46	33	17	51	39	22	45	33	18	52	38	24	41	32	19	53	37	23	36	27	16	53	37	23	32	23	
	5	49	36	16	31	36	23	46	33	17	49	39	22	45	33	18	52	38	24	41	32	19	53	37	23	36	27		53	37	23	32	23	
	10	40	36	16	19	28	23	46	33	17	38	39	22	45	33	18	52	38	24	41	32	19	53	37	23	36	27		53	37	23	32	23	
	15	23	36	16		16		46	33	17	28	30	22	45	33	18	44	38	24	41	32	19	53	37	23	36	27		53	37	23	32	23	
	20							46	33	17	16	16		45	33	18	35	38	24	41	32	19	51	37	23	36	27		53	37	23	32	23	
	25							46	33	17				45	33	18	26	29	24	41	32	19	42	37	23	36	27		53	37	23	32	23	
-10	30							46	33	17				45	33	18	21			41	32	19	34	37	23	36	27		53	37	23	32	23	
(-4.3	40							28	26	17				45	33	18				41	32	19				36	27		42	37	23	32	23	
PSIG)	50													42	33	18				41	32	19				36	27		23			32	23	
	60																			41	32	19				36	27					32	23	
	70																			41	32	19				36	27					32	23	
	80																									36	27					32	23	
	100																															32	23	
	0	41	27		37	32	16	38	27		46	31	14	37	27		47	31	16	32	21		46	31	16	27	17		44	31	15	23	15	
	5	41	27		23	28	16	38	27		44	31	14	37	27		47	31	16	32	21		46	31	16	27	17		44	31	15	23	15	
	10	31	27					38	27		31	31	14	37	27		47	31	16	32	21		46	31	16	27	17		44	31	15	23	15	
	15	26	27					38	27		17	23	14	37	27		40	31	16	32	21		46	31	16	27	17		44	31	15	23	15	
	20							38	27					37	27		30	31	16	32	21		46	31	16	27	17		44	31	15	23	15	
	25							38	27					37	27		20	18		32	21		38	31	16	27	17		44	31	15	23	15	
-15	30							38	27					37	27					32	21		28	28	16	27	17		44	31	15	23	15	
(-6.5	40							28	26					37	27					32	21					27	17		31	31	15	23	15	
PSIG)	50													37	27					32	21					27	17					23	15	
	60																			32	21					27	17					23	15	
	70																			32	21					27	17					23	15	
	80																									27	17					23	15	
	100																															23	15	
	0	32	18		32	22		27	16		36	24		26	14		33	22		21			33	20		17			30	19		15		
	5	32	18			12		27	16		36	24		26	14		33	22		21			33	20		17			30	19		15		
	10	23	18					27	16		31	24		26	14		33	22		21			33	20		17			30	19		15		
	15		18					27	16		17	24		26	14		33	22		21			33	20		17			30	19		15		
	20		18					27	16					26	14		30	22		21			33	20		17			30	19		15		
	25							27	16					26	14					21			33	20		17			30	19		15		
-20	30							27	16					26	14					21				20		17			30	19		15		
(-8.9	40																			21						17				19		15		
PSIG)	50																			21						17						15		
	60																			21						17						15		
	70																			21						17						15		
	80																									17						15		
	100																															15		
Motive Steam Flow, Qm (Lb/Hr)		336			222			499			278			626			335			754			392			882			476			1072		
Motive Air Flow, Qm (SCFM)		111			074			167			092			209			112			251			131			294			159			358		

www.jrgjt.com

Dimensions

Models SL, ML, HL, SG, HG

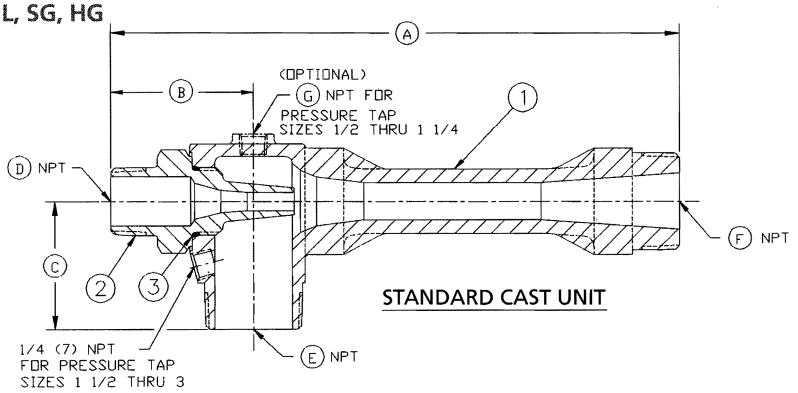

STANDARD CAST UNIT

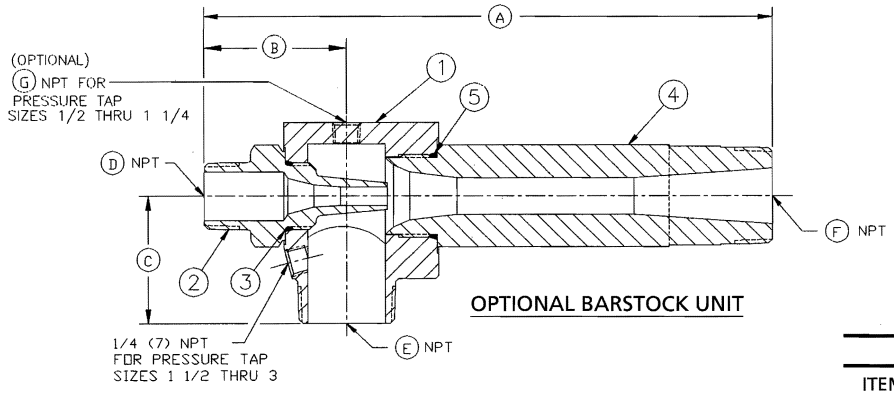

OPTIONAL BARSTOCK UNIT

ASSEMBLY DIMENSIONS (TYPICAL FOR BOTH UNITS)
MODELS SL, ML, HL, SG, & HG

Parts List

ITEM	DESCRIPTION
1	BODY
2	NOZZLE
3	O-RING, NOZZLE
4	DISCHARGE
5	O-RING, DISCHARGE

SL, ML, HL, SG, HG — Assembly Dimensions

Inches (mm)

MODEL	SIZE	A		B		C		D		E		F		G	
SL ML, HL, SG, HG	1/2	4.500	(114)	1.625	(41)	1.250	(32)	1/4 3/8	(7) (10)	1/2	(15)	1/2	(15)	1/8	(3)
SL ML, HL, SG, HG	3/4	5.875	(149)	2.000	(51)	1.500	(38)	3/8 1/2	(10) (15)	3/4	(20)	3/4	(20)	1/4	(7)
SL ML, HL, SG, HG	1	7.125	(181)	2.250	(57)	1.750	(44)	1/2 3/4	(15) (20)	1	(25)	1	(25)	1/4	(7)
SL ML, HL, SG, HG	1-1/4	9.000	(229)	2.500	(64)	2.250	(57)	3/4 1	(20) (25)	1-1/4	(32)	1-1/4	(32)	1/4	(7)
SL, ML, SG, HG, HL	1-1/2	11.000	(279)	2.750	(70)	2.500	(64)	1 1-1/4	(25) (32)	1-1/2	(40)	1-1/2	(40)	–	
SL, ML, SG, HG, HL	2	14.375	(365)	3.125	(79)	3.000	(76)	1-1/4 1-1/2	(32) (40)	2	(50)	2	(50)	–	
SL, ML, SG, HG, HL	2-1/2	18.125	(460)	3.500	(89)	4.125	(105)	1-1/2 2	(40) (50)	2-1/2	(65)	2-1/2	(65)	–	
SL, ML, HL, SG, HG	3	23.875	(606)	4.000	(102)	5.000	(127)	2	(50)	3	(80)	3	(80)	–	

OPTIONAL CONNECTIONS FOR MOTIVE, SUCTION AND OUTLET CONNECTIONS

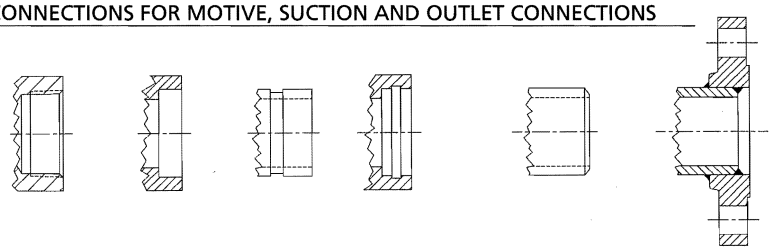

FEMALE NPT SOCKET WELD VICTAULIC SILBRAZE SCH 80 BUTT WELD 150# FLANGE

NOTE: OPTIONAL CONNECTIONS WILL INCREASE A, B, AND/OR C. CONSULT FACTORY FOR DETAILS.

www.jrgjt.com